EE381 - Power Systems

S. Sivasubramani

Associate Professor
Electrical Engineering Department
Indian Institute of Technology Patna
www.iitp.ac.in/~siva

Overview

Power Systems

Indian Power Sector - An Overview

Syllabus

Books

Course Mechanics

Power Systems

Power systems have the following three components.

1. Generation - Source of Energy
2. Transmission - Transmission of Energy over long distance (close to the speed of light)
3. Distribution - Consumption of Energy

- Electric Energy is seldom used in its form.
- It is easy to convert from other forms and transmit from sources to loads.
- Power system is the most complex system on earth.
- In interconnected systems, the frequency has to be the same. In India, it is 50 Hz. In some countries, it is 60 Hz.

Generation

Electric energy is generated at generating stations by converting other forms of energy.

1. Conventional
   - Thermal
   - Hydro (Renewable)
   - Nuclear
2. Non Conventional (Renewable)
   - Solar
   - Wind
   - Biomass
   - Tidal
   - Geo-Thermal
   - Small Hydro
   - Waste

Renewable Energy Sources (RES)

RES have unlimited resources. But they are intermittent.

Structure of a Power System

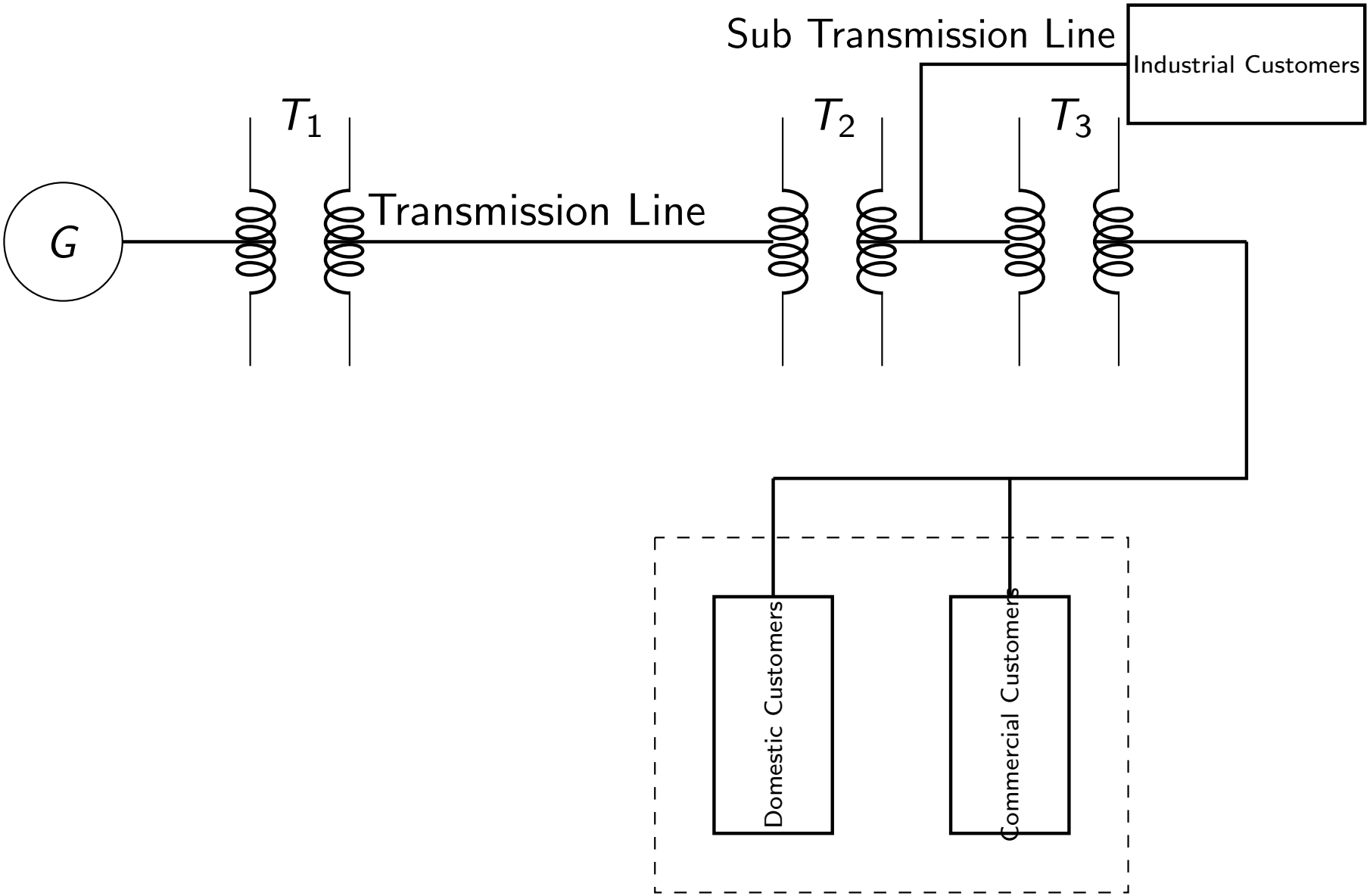

Practical System

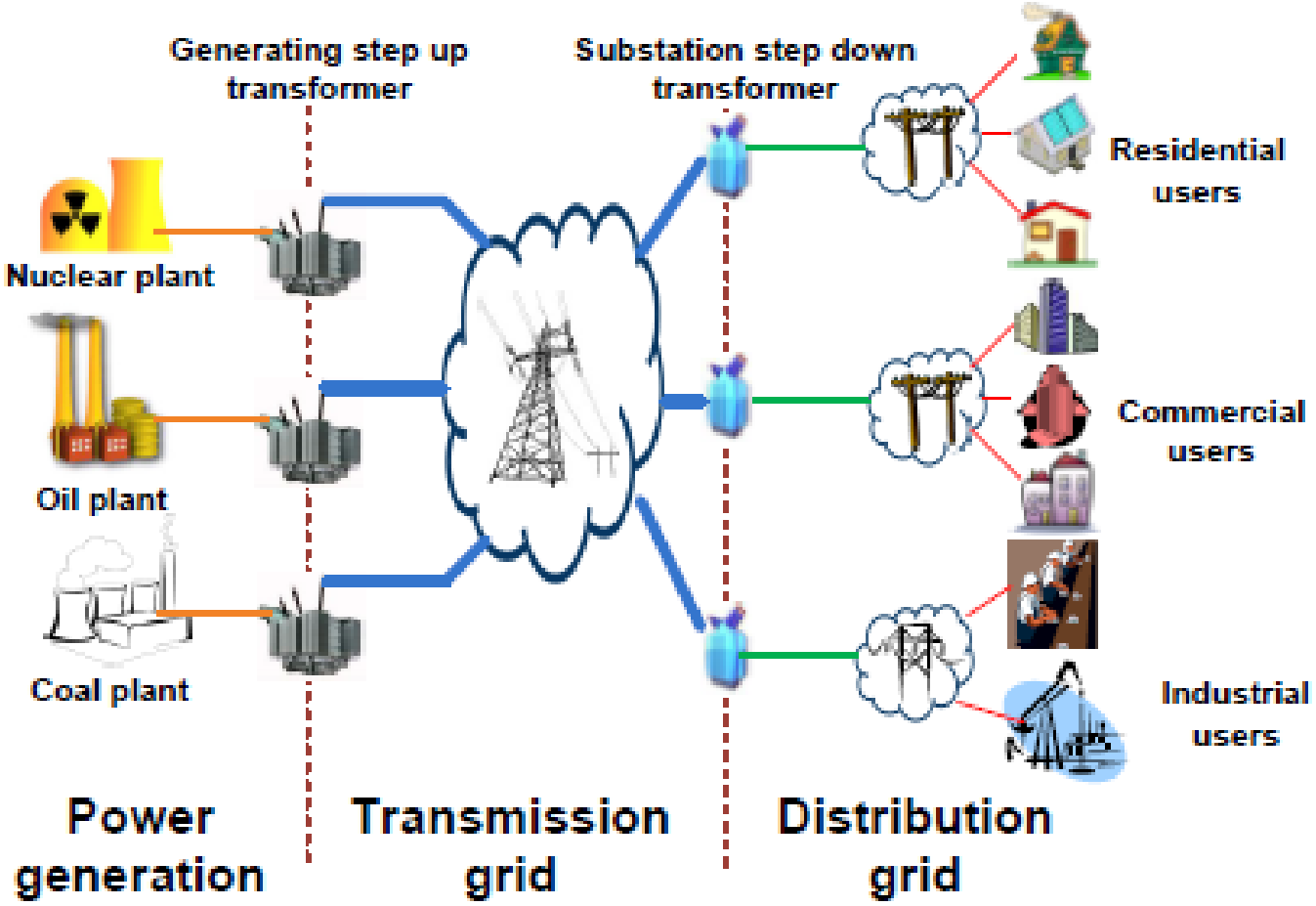

Interconnected Systems

Reasons for interconnections

1. To improve reliability
2. To improve economy

- Several power systems are interconnected to form a grid.
- Several regional grids are interconnected to form a national grid.
- Interconnections are done at Transmission networks.
- In interconnected systems, the frequency of generation must be the same.

Power System

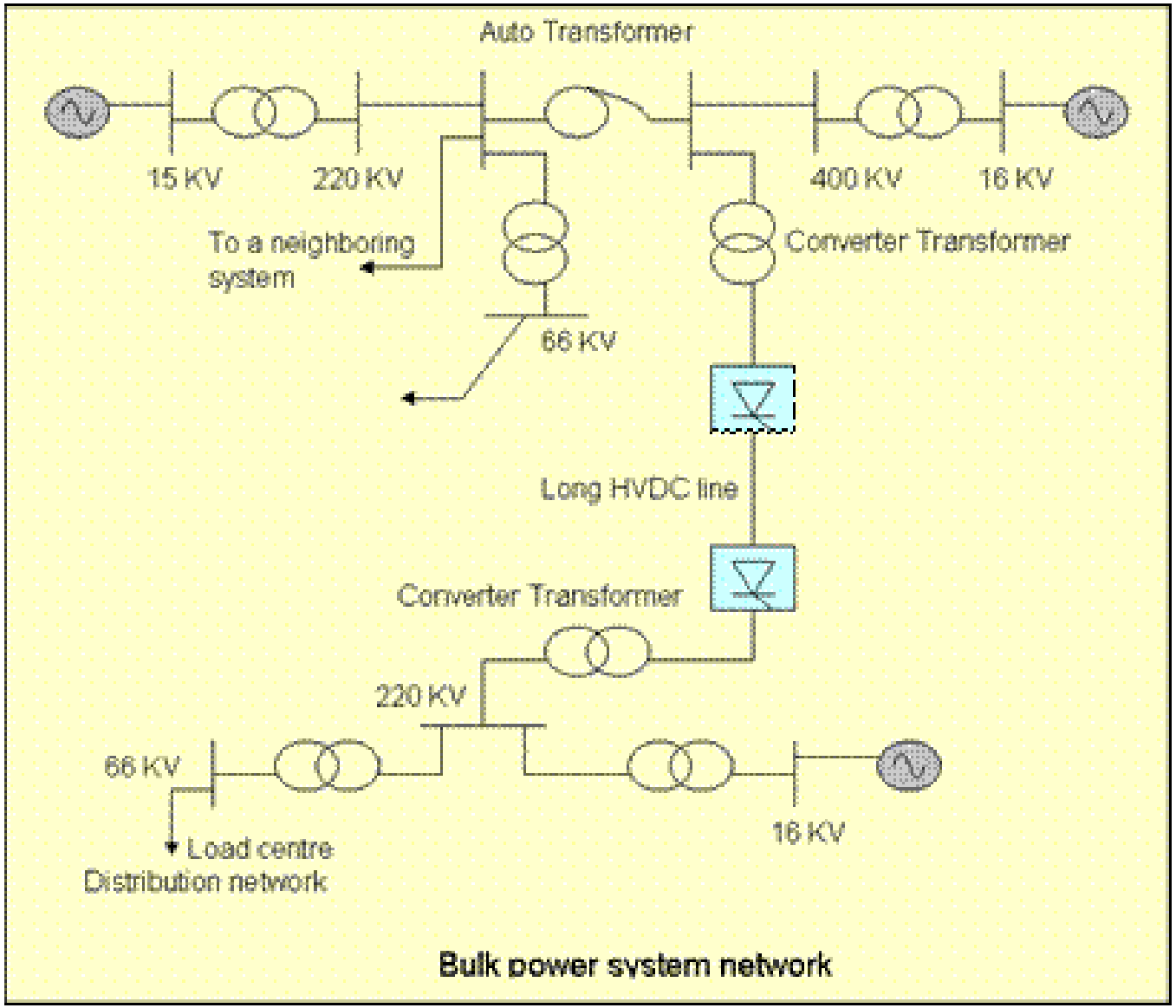

Source : NPTEL

Grid Frequency

POWER SYSTEM OPERATION CORPORATION LIMITED

NATIONAL LOAD DESPATCH CENTRE, NEW DELHI

Frequency profile for 22-Jul-2022 (Friday)

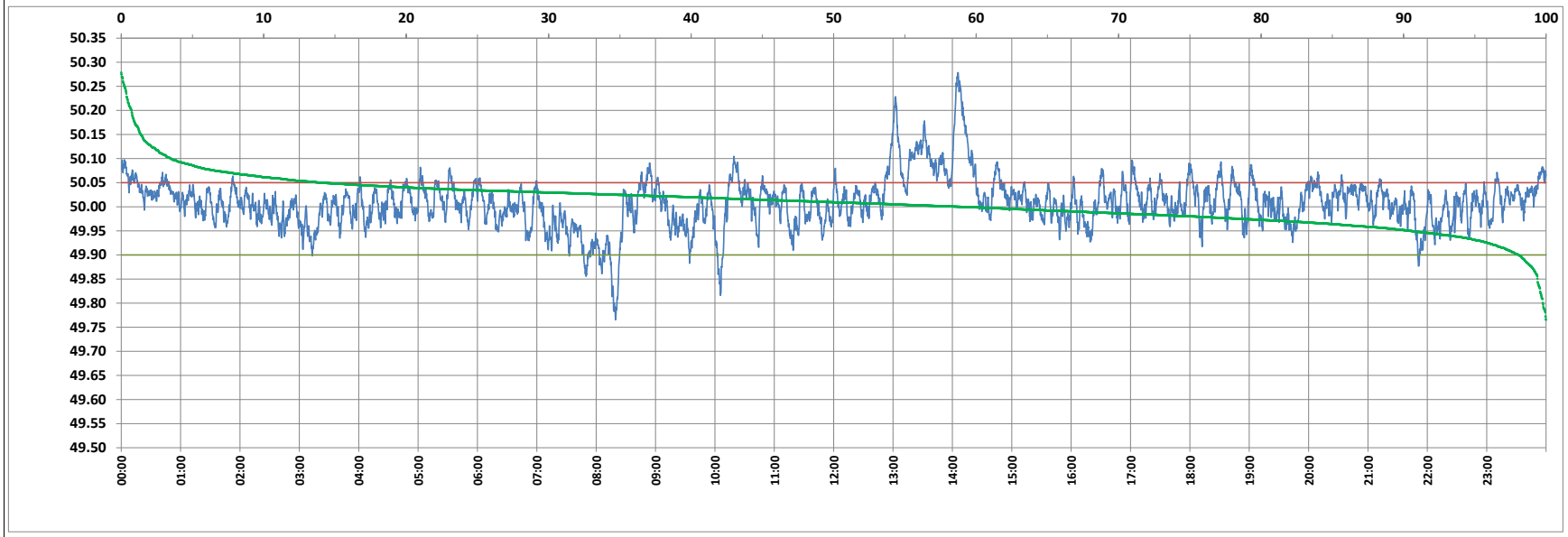

<49.7	<49.90	<49.97	49.7-49.8	49.8-49.9	49.9-50.0	50.0-50.1	50.1-50.2	49.90-50.05	49.7-50.2	49.97-50.03	50.05-50.1	>50	>50.03	>50.05	>50.2	<49.95	49.95-50.05	49.90-49.95
0.00	1.94	18.06	0.23	1.71	39.13	55.43	2.77	84.02	99.27	52.33	10.54	58.92	29.62	14.04	0.73	9.50	76.46	7.56

Average Frequency : 50.009	Frequency Variation Index : 0.0271	Standard Deviation : 0.0514	Mileage: 43.5	FDI: 16.0

Instantaneous Frequency		
Max	50.279	14:05:40
Min	49.765	8:19:30

15 minute Average Frequency		
Max	50.202	14:15:00
Min	49.887	8:30:00

No. of excursions	
above 50.03 Hz	209
below 49.97 Hz	132
above 50.00 Hz	236
below 50.00 Hz	235

Average time freq per excursion remains	
below 49.97	0:01:58
above 50.03	0:02:02

No. of hours freq outside 49.9-50.05 Hz	3:50:10

Source : AGRA 10 Sec. (8640 samples)

Source : POSOCO

Indian Power Sector - An Overview

- India is the third largest producer of electricity (more than 1 TU[1] a year) in the world.
- India is also the third largest consumer of electricity in the world.
- T& D losses are 21 %.
- However , the per capita energy consumption is 1,208 kWh per person per year.
- It is low compared to many countries. For example, US : 12,154 & China : 4,617
- It is even lower than the world average (3,081 kWh).

[1] 1 TU = 1,000,000,000,000 kWh

Installed Capacity

The installed capacity as on 30-06-2022 is **403.759 GW**.

Type	**Capacity (MW)**	**% of Total**
Thermal [2](Coal, Oil & Gas)	236,065	61 %
Hydro	46,850	12 %
Nuclear	6,780	2 %
RES	114064	25 %
Total	**383,374**	

- The peak demand in June, 2022 was **211.856 GW**.
- There was a deficit of 0.4 % .

Source : Central Electricity Authority, Ministry of Power, GoI

[2] Coal based power plants account for 90 %

Installed Capacity - Sector Wise

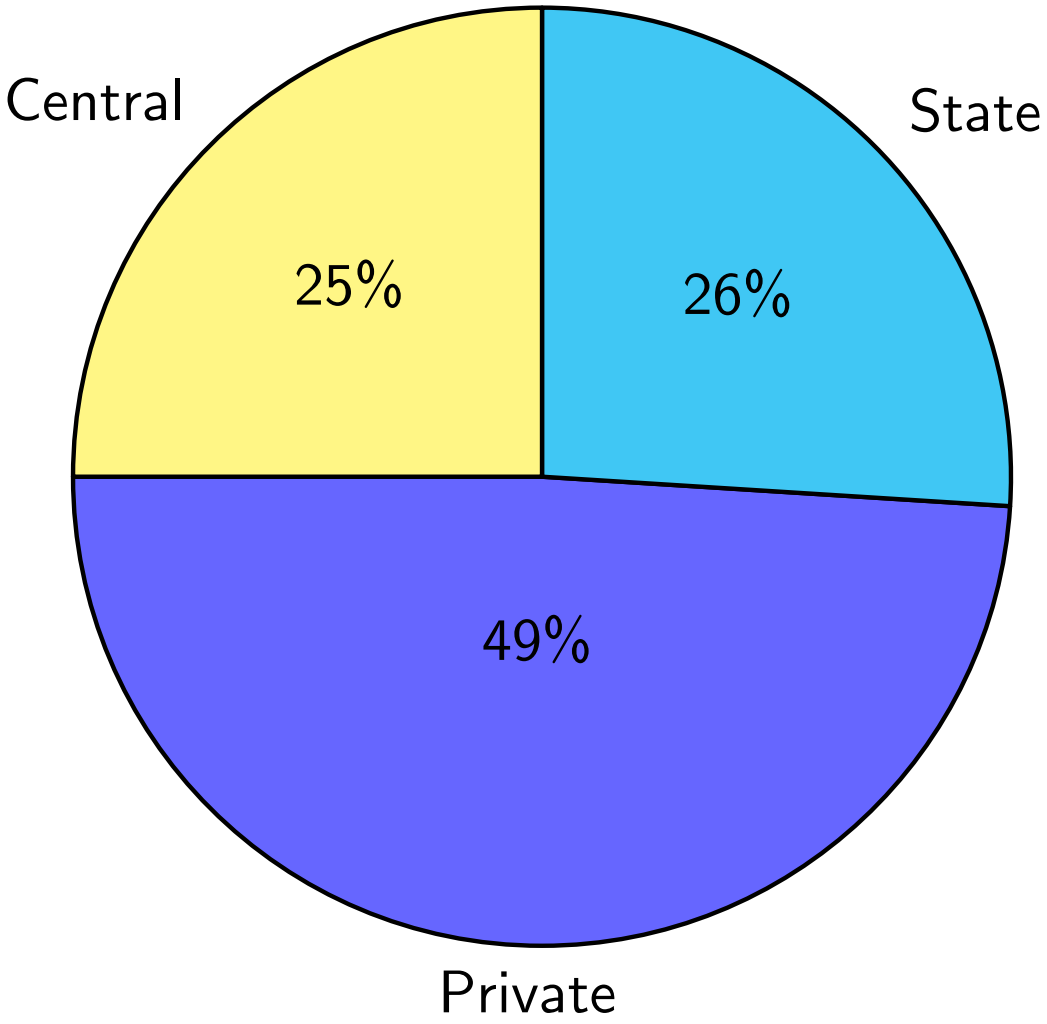

Electricity Generation in June 2022

Total electricity generation in June 2022 was 142.73 BU.

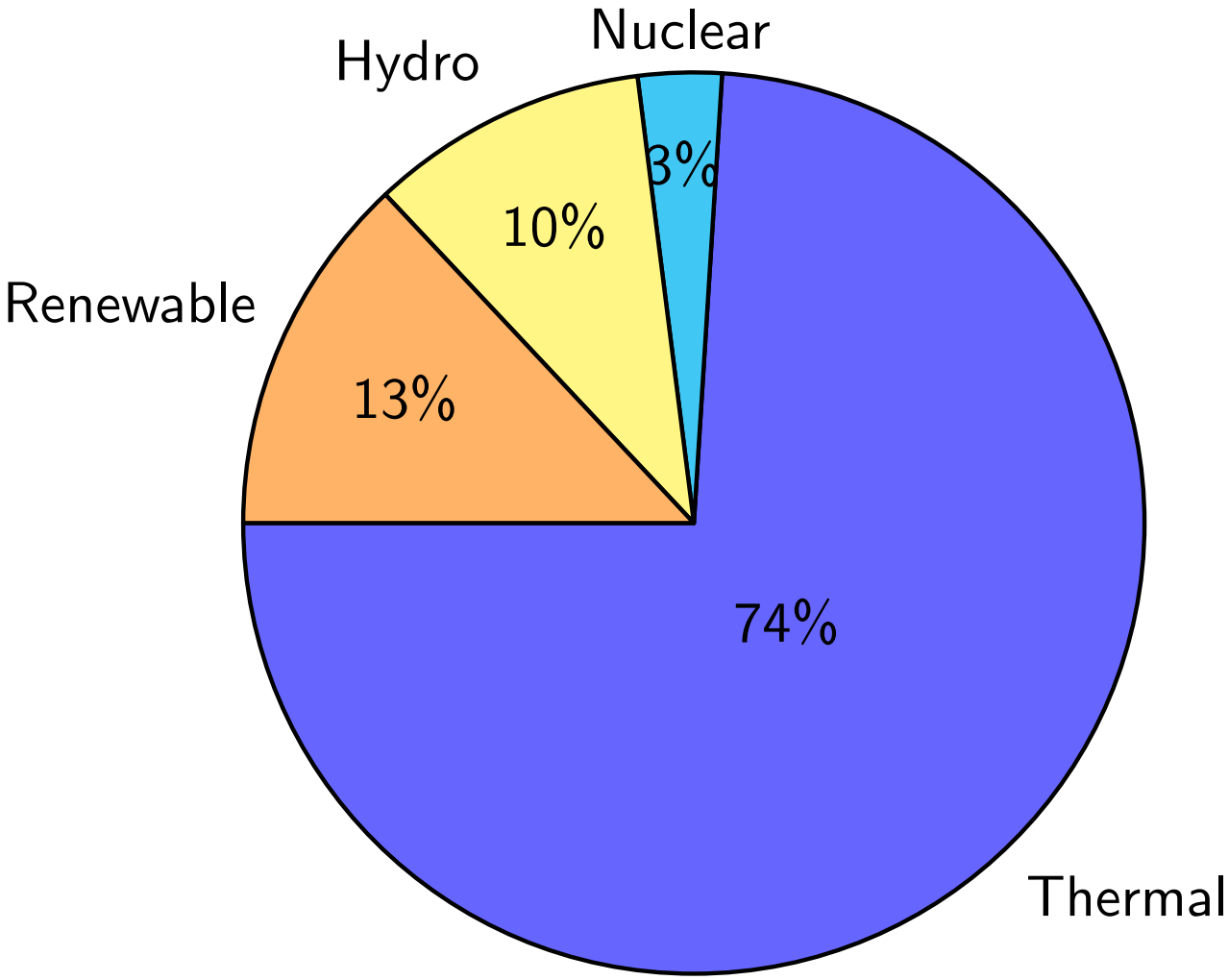

Most of the energy is still from Thermal.

Thermal Power Plant

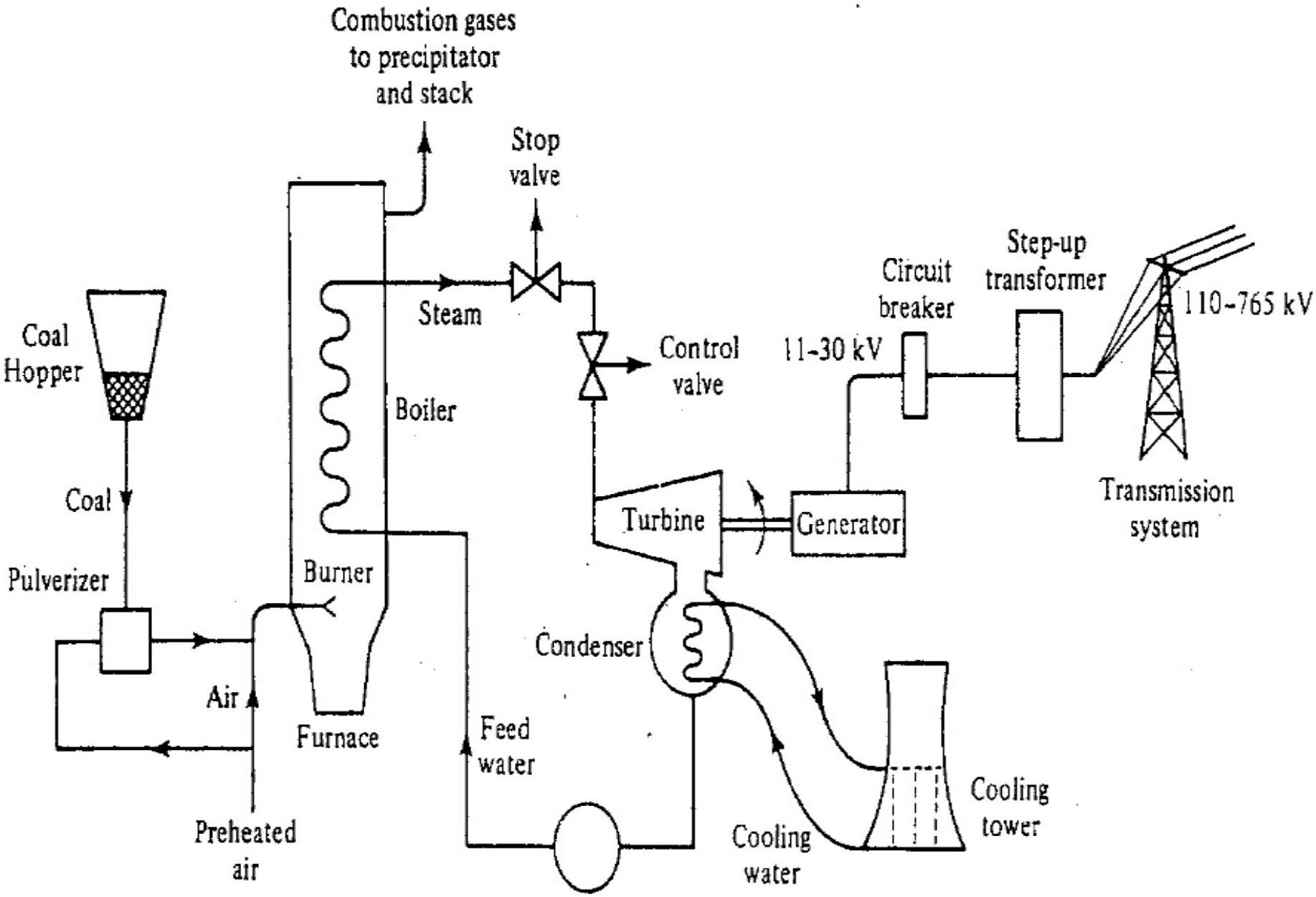

What We will study in EE381..

We will analyze power systems under

- steady state conditions
- abnormal conditions

In order to analyze, every component of power systems has to be modeled.

- Generator
- Transformer
- Transmission line
- Load

Since the steady state model of synchronous machines and transformers have already been studied in EE280, we will only model the following in this course.

- Transmission line

Loads are usually considered as

1. Constant power
2. Constant impedance
3. Constant current

We usually simplify any analysis at the cost of accuracy....

Syllabus

- Basic Concepts
- Line Parameter Calculation
- Performance of Transmission lines
- Per unit calculation
- Network Matrices
- Load Flow
- Economic Dispatch
- Fault Analysis
- Power System Stability

Books

- Text Books
  1. W. D. Stevenson, Jr., Elements of Power System Analysis, Tata McGraw-Hill, 4e, 2008.

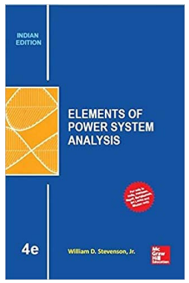

- Reference Books
  1. J. J. Grainger and W. D. Stevenson, Jr., Power System Analysis, Tata McGraw-Hill, 2008.

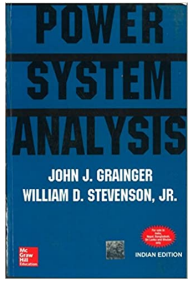

  2. D. P. Kothari and I. J. Nagrath, Modern Power System Analysis, Tata McGraw-Hill, 4e, 2011.

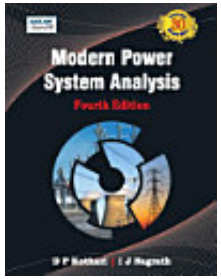

Course Mechanics

- Two Quizzes - 20 %
- Mid Sem - 30 %
- End Sem - 50 %

Course Page

`https://www.iitp.ac.in/~siva/2022/ee381/index.html`